Floating DBS LIDAR : Error quantification and correction of wave induced turbulence intensity bias

T. Désert, S. Aubrun, G. Knapp, S. Kraiem, M. Bellorge, B. Clauzet, R. Barbot, L. Mourre - MATILDA

WESC : Mini-Symposium: Lidars and Floating Wind Energy

28/05/21

LEOSPHERE WindCube v2

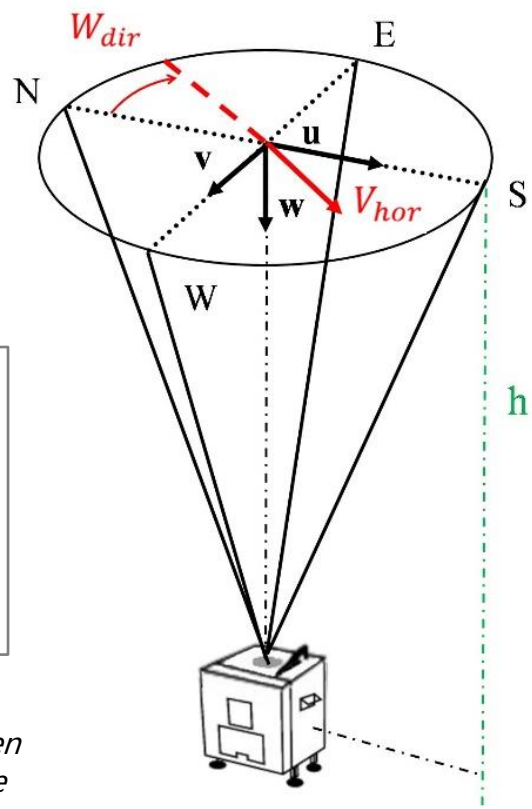

Wind measurements

Five beam positions (scan $\sim 1s$) combined to compute at several altitudes :

- $U(h)$: from beams N-S
- $V(h)$: from beams E-W
- $W(h)$: from vertical beam

Induced errors:

Contamination by cross-correlations between the components of the wind vector and the assumption of homogeneity in the volume.

[1] Sathe et al. *Estimating Turbulence Statistics and Parameters from Ground- and Nacelle-Based Lidar Measurements*, IEA Wind Task 32 Expert Report 2015.

LEOSPHERE WindCube v2

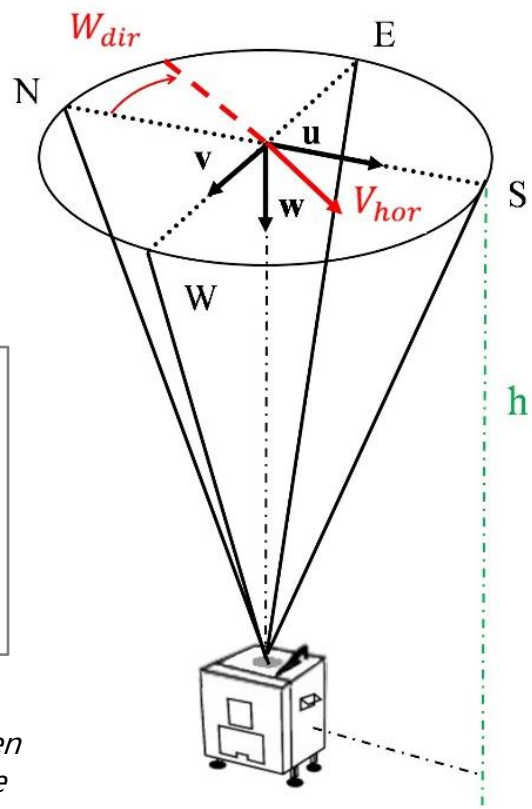

Wind measurements

Five beam positions (scan ~$1s$) combined to compute at several altitudes :

- $U(h)$: from beams N-S
- $V(h)$: from beams E-W
- $W(h)$: from vertical beam

Induced errors:

Contamination by cross-correlations between the components of the wind vector and the assumption of homogeneity in the volume.

Turbulence Intensity (TI)

Statistical study of the acquired wind speeds :

$$V_{hor} = \sqrt{U(h)^2 + V(h)^2}$$

$$TI = \frac{\sigma_{V_{hor}}}{V_{hor}}$$

Induced errors:

Turbulence statistics filtered by the measurement volume and the "low" acquisition frequency of the lidar.

[1] Sathe et al. *Estimating Turbulence Statistics and Parameters from Ground- and Nacelle-Based Lidar Measurements*, IEA Wind Task 32 Expert Report 2015.

Wave induced motions (FLS)

Rotational motions

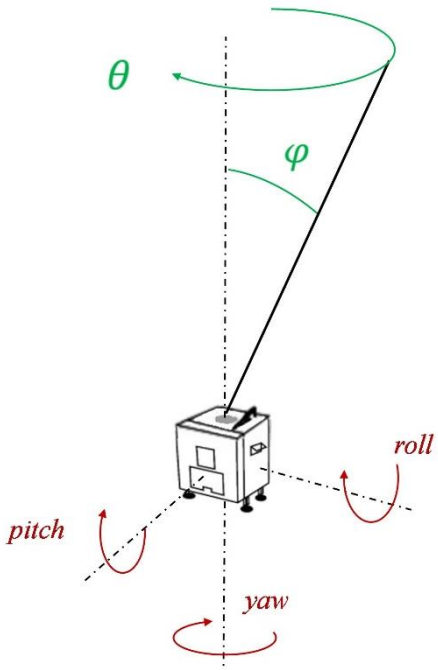

Impacting

The geometry of the measurement cone : φ and θ for each beam

Translational motions

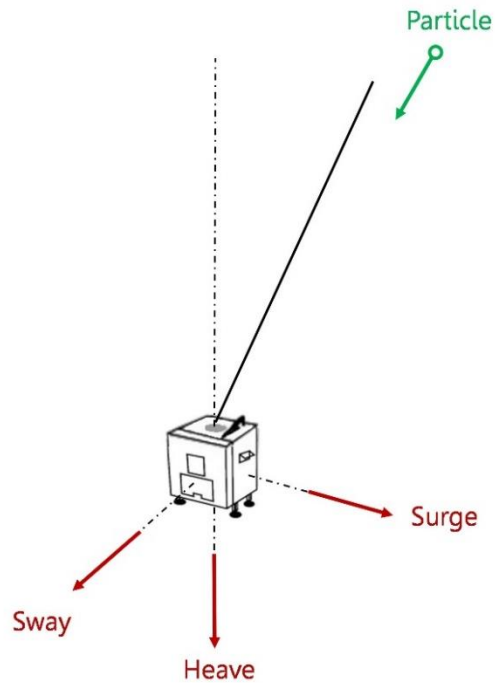

Impacting

The relative velocity of the lidar to the particle that backscatters the laser

Model estimating wave induced TI

Model estimating wave induced TI

Hypothesis

Atmospheric turbulence and motion induced turbulence are independant variables

We have:
Turbulence measured by the floating lidar

We look for:
Atmospheric Turbulence

$$\boxed{Var(V_{hor}^{mes})} = \boxed{Var(V_{hor}^{atm})} + \boxed{Var(V_{hor}^{motion})}$$

We estimate:
Wave induced turbulence in a turbulence free amtosphere

Model estimating wave induced TI

How the model works

It simulates the behavior of the WindCube v2 in a turbulence free amtosphere

Inputs

- 10min Mean Wind Vector (from floating lidar) : **Constant**
- IMU measurements within the 10min :
  - Rotational
  - Translational

Outputs

$$u(t,h) = \begin{pmatrix} u_{10\min}(h) \\ v_{10\min}(h) \\ w_{10\min}(h) \end{pmatrix}^T \frac{U^{mat}(t)}{2sin\varphi} - \frac{V^u_{trans}(t)}{2sin\varphi}$$

$$v(t,h) = \begin{pmatrix} u_{10\min}(h) \\ v_{10\min}(h) \\ w_{10\min}(h) \end{pmatrix}^T \frac{V^{mat}(t)}{2sin\varphi} - \frac{V^v_{trans}(t)}{2sin\varphi}$$

$$w(t,h) = \begin{pmatrix} u_{10\min}(h) \\ v_{10\min}(h) \\ w_{10\min}(h) \end{pmatrix}^T W^{mat}(t) - V^w_{trans}(t)$$

Model estimating wave induced TI

10min estimate of the wave induced variance in horizontal speed measurement

$$
\begin{aligned}
V'_{hor}(h)^2 \frac{1}{(2sin\varphi)^2} \Bigg(& \begin{pmatrix} u_{10\min}(h) \\ v_{10\min}(h) \\ w_{10\min}(h) \end{pmatrix}^{T^2} \overline{U^{mat^2} + V^{mat^2}} + \\
& 2\, u_{10\min}(h)\, v_{10\min}(h)\, \overline{U_1^{mat} U_2^{mat} + V_1^{mat} V_2^{mat}} \\
& + 2\, u_{10\min}(h)\, w_{10\min}(h)\, \overline{U_1^{mat} U_3^{mat} + V_1^{mat} V_3^{mat}} \\
& + 2\, v_{10\min}(h)\, w_{10\min}(h)\, \overline{U_2^{mat} U_3^{mat} + V_2^{mat} V_3^{mat}} \\
& - 2 u_{10\min}(h) \overline{U_1^{mat} V_{trans}^{u} + V_1^{mat} V_{trans}^{v}} \\
& - 2 v_{10\min}(h) \overline{U_2^{mat} V_{trans}^{u} + V_2^{mat} V_{trans}^{v}} \\
& - 2 w_{10\min}(h) \overline{U_3^{mat} V_{trans}^{u} + V_3^{mat} V_{trans}^{v}} \\
& + \overline{{V_{trans}^{u}}^2 + {V_{trans}^{v}}^2} \Bigg) - \overline{V_{hor}(h)}^2
\end{aligned}
$$

Independants

10 min Floating Lidar data
10min IMU data + model

Needs real time communication between model and FLS (or estimate)

Horizontal velocity measured by the lidar in the model definition and boundary conditions

Advantages and disadvantages of the model

Advantages

- Rotational and translational effects are represented by 10min mean matrices :
  - averages the effect of minor instrumental errors
  - reduces the importance of time synchronization
- Very fast computation compared to a beam by beam correction [2]

Disadvantages

- Does not take into account atmospheric boundary layer shear
- Filters out the 10mins that do not fit the model assumptions or do not show consistency between IMU and FLS measurements

[2] F. Kelberlau et al., *Taking the motion out of Floating lidar: Turbulense intensity estimates with a continuous-wave wind lidar.* Remote Sensing , vol. 12, 898, 2020.

Experimental campaign

Campaign presentation

Six months of measurements

13 weeks selected by a clustering method to best represent the overall atmospheric and sea conditions

Data filters

- *10min availability : >90%*
- $2m/s < V_{hor} < 20m/s$
- $0 < TI < 0.4$

Experimental facilities

Meteo Mast Fécamp (EDF Renouvelables)

- Wire mesh Mast
- Cup anemometers (alt: 33.8 & 54.8m)
- Ground pulsed lidar Windcube v2

Buoy WINDSEA_02 (AKROCEAN)

- Pulsed lidar Windcube v2
- Inertial Measurement Unit
- Passive mechanical stabilisation
- Wave buoy

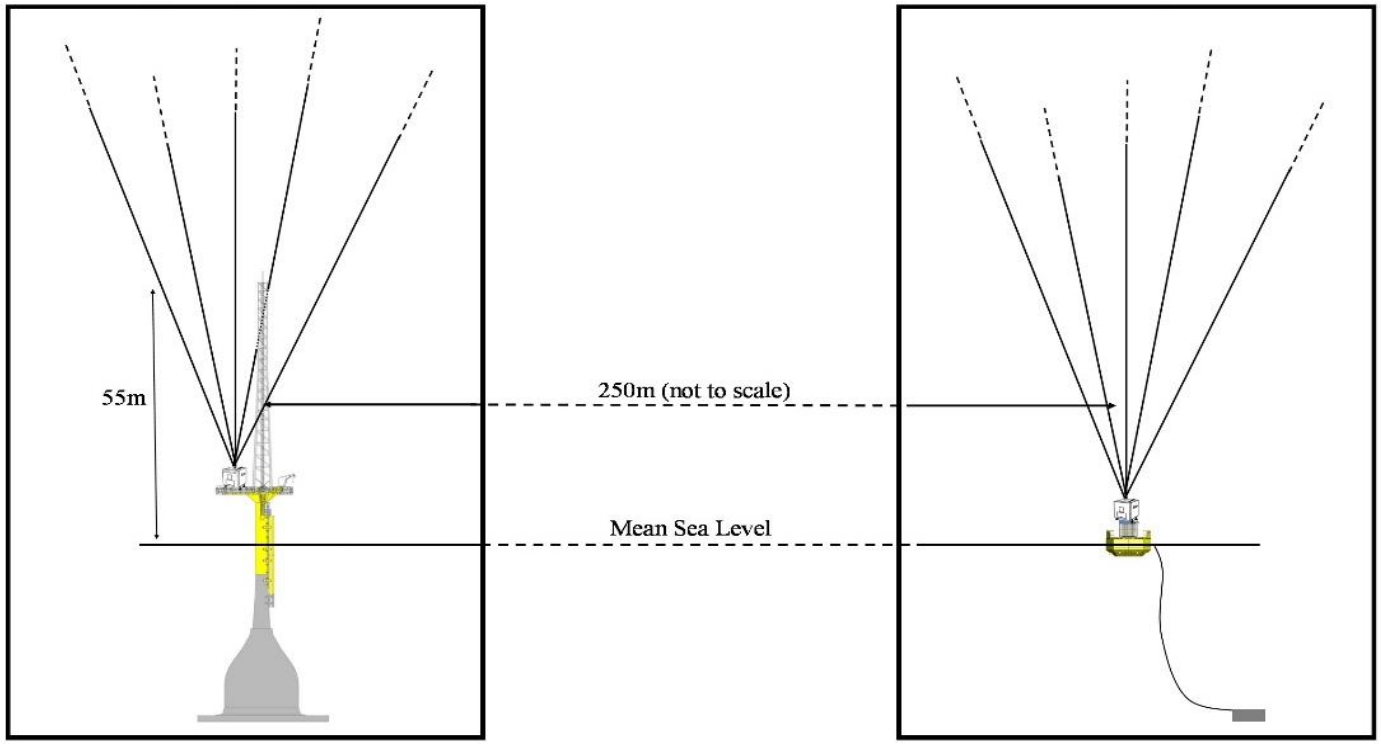

Wave induced TI measurement error

Floating lidar TI bias : 54,8m

- *Overall overestimation* (~0.03)
- *Motion induced bias ≫ lidar technological bias*

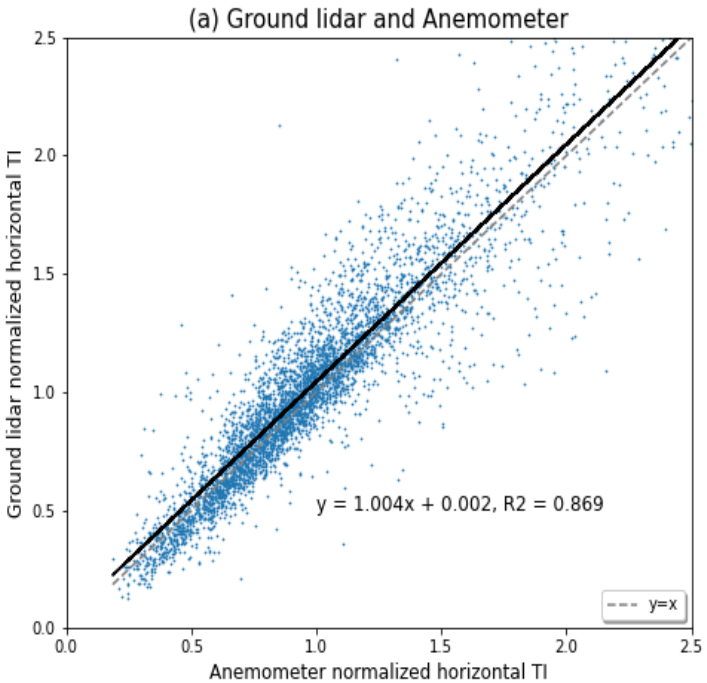

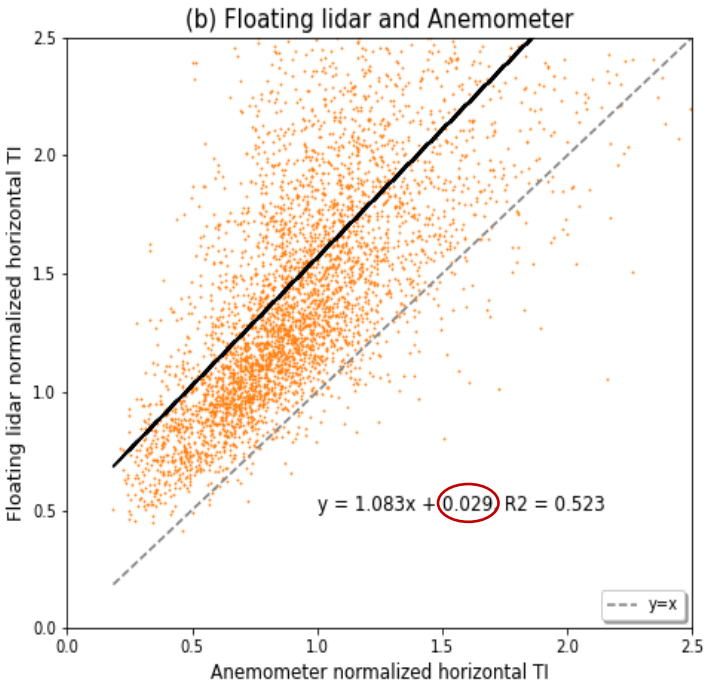

Wave induced TI measurement error

Floating lidar TI bias : 54,8m

- *TI measurement error depends on meteoceanic conditions*
- *Best indicator : wave height which is highly correlated with wind speed*
- *No conditions = zero error from FLS*

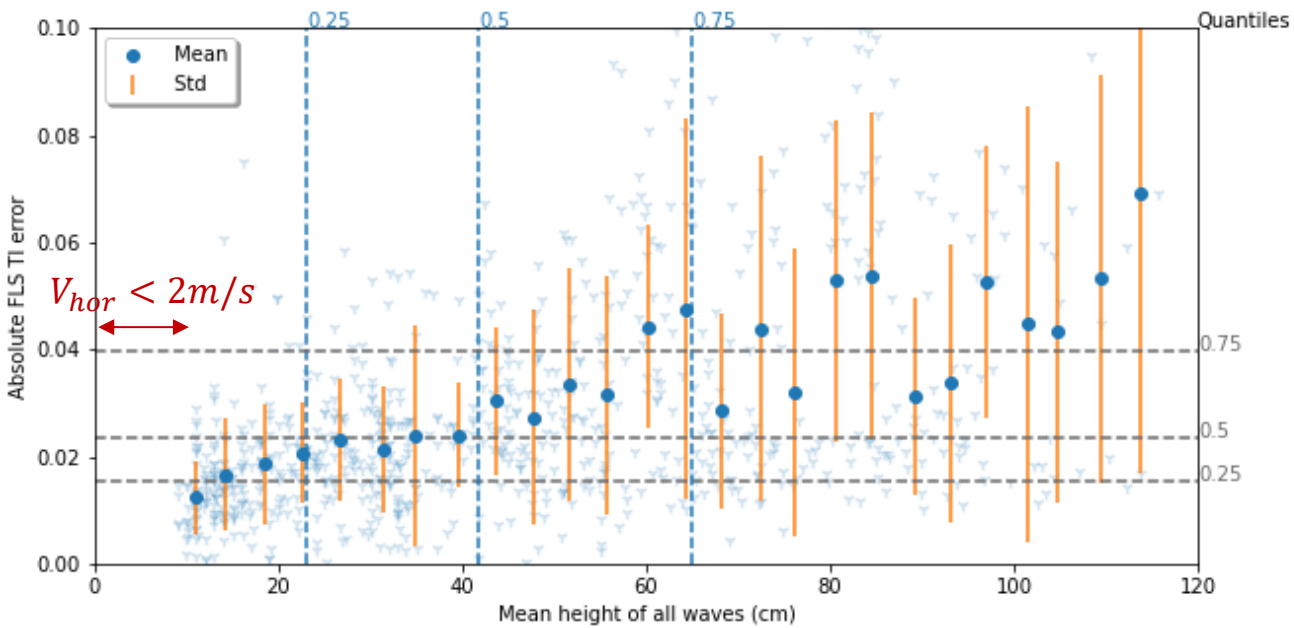

Main Sources of TI bias

Wind rose

- *in the lidar referential*
- *normalized wind speed*

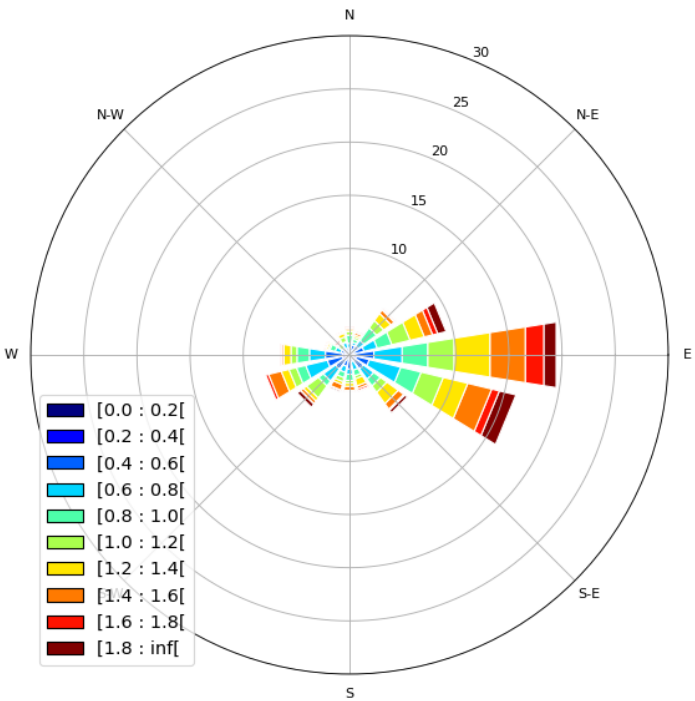

Main sources of TI error

Rotational motions

Roll modifying tilt angle of east and west beams

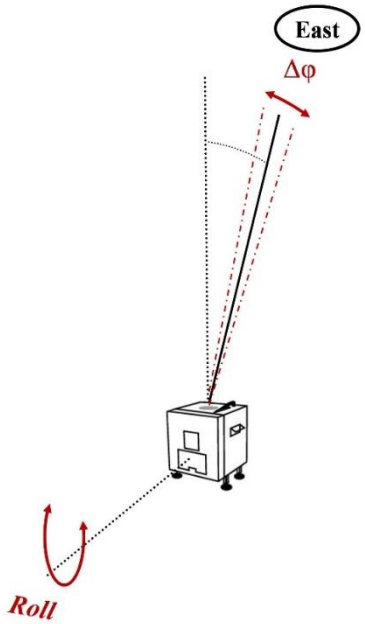

Translational motions

Heave has the most impact on horizontal WS

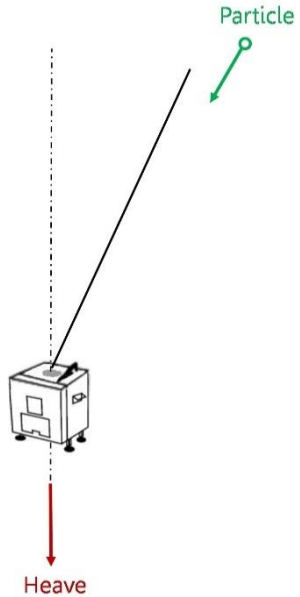

Corrected atmospheric TI estimate

Corrected atmospheric TI estimate

For all 10min measurements : 94,4m & 134,4m

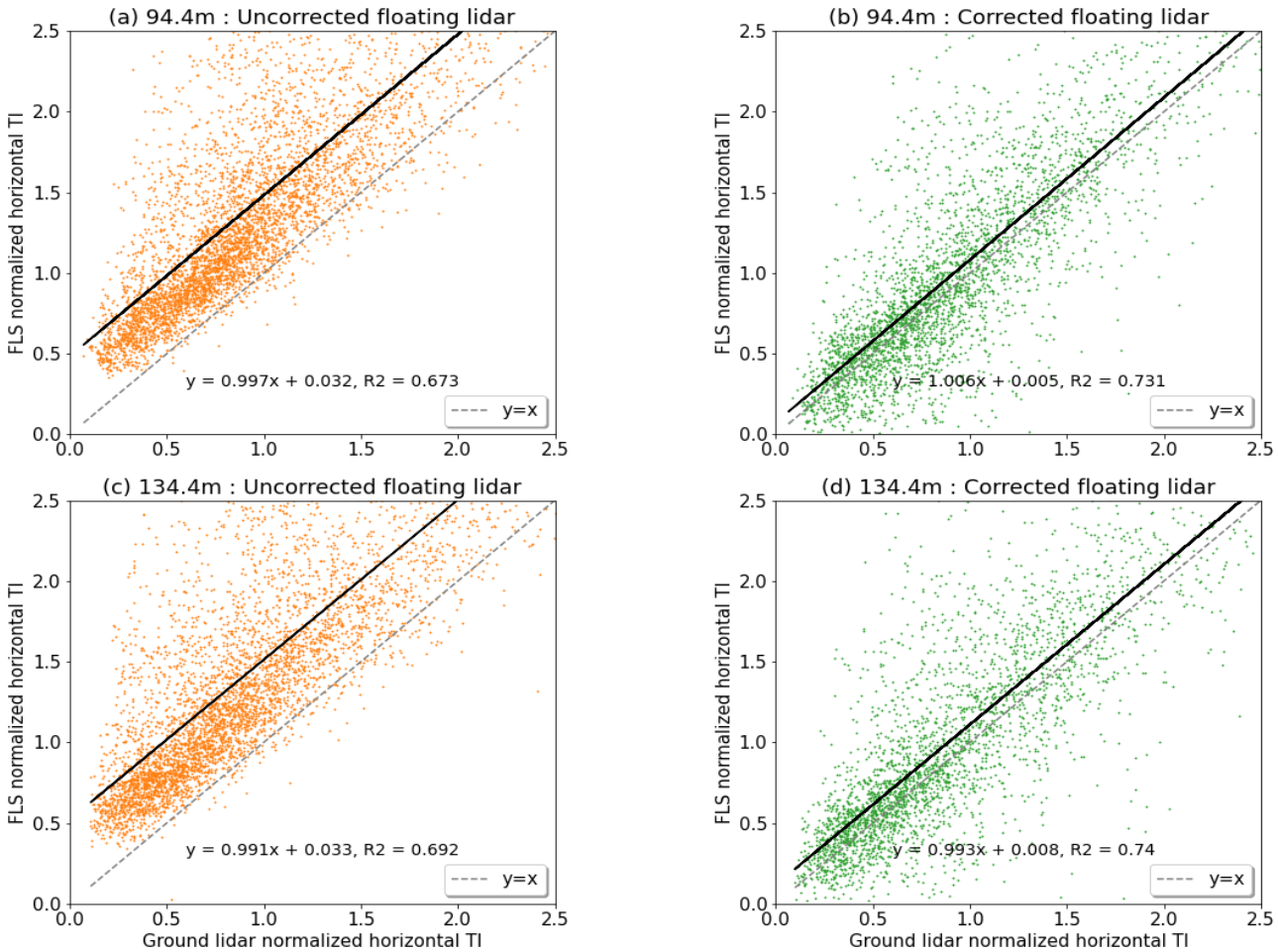

Corrected atmospheric TI estimate

Most troubled week evaluated : 94,4m

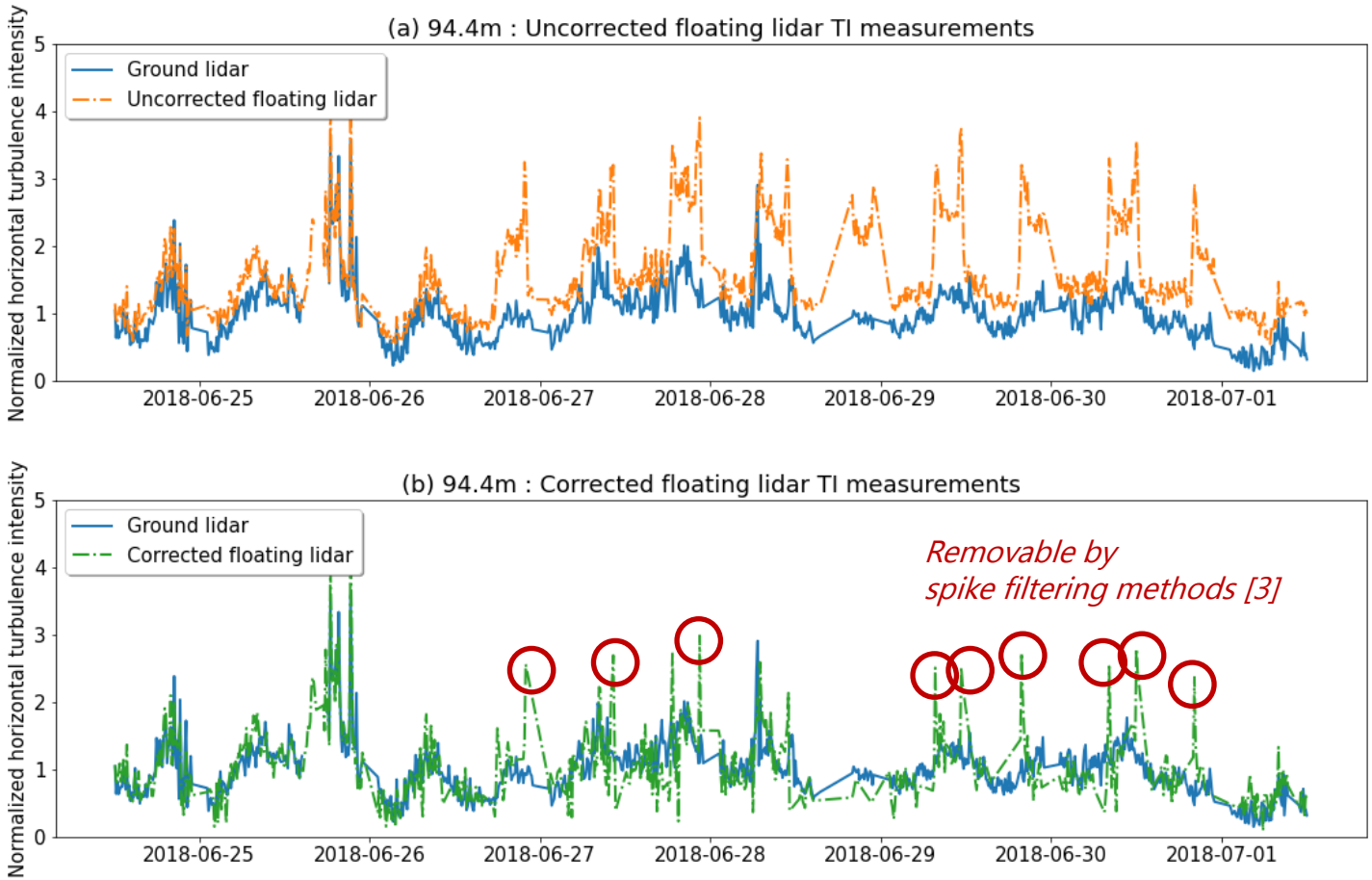

[3] Wang, H. et al. *Wind measurements from arc scans with Doppler wind lidar*, J. Atmos. Ocean. Tech., 32, 2024–2040, 2015.

Conclusion

Conclusion

- The mean overestimation of the Floating WindCube v2 Turbulence Intensity measurements :
  ~ 0.03 (at Fécamp, buoy WINDSEA_02)

Conclusion

- The mean overestimation of the Floating WindCube v2 Turbulence Intensity measurements :
  ~0.03 (at Fécamp, buoy WINDSEA_02)

- No meteoceanic conditions can ensure a proper TI measurement from the FLS :
  need for a correction of the motion induced TI

Conclusion

- The mean overestimation of the Floating WindCube v2 Turbulence Intensity measurements :
  ~0.03 (at Fécamp, buoy WINDSEA_02)

- No meteoceanic conditions can ensure a proper TI measurement from the FLS :
  need for a correction of the motion induced TI

- We have created a model that quickly evaluates the 10min TI error induced by the motion of the buoy :
  inputs: the six degrees of freedom of a IMU and the 10min mean wind speed data from the floating lidar

Conclusion

- The mean overestimation of the Floating WindCube v2 Turbulence Intensity measurements :
  ~0.03 (at Fécamp, buoy WINDSEA_02)

- No meteoceanic conditions can ensure a proper TI measurement from the FLS :
  need for a correction of the motion induced TI

- We have created a model that quickly evaluates the 10min TI error induced by the motion of the buoy :
  inputs: the six degrees of freedom of a IMU and the 10min mean wind speed data from the floating lidar

- Using the model drastically reduces the TI measurement error of the floating WindCube v2 :
  It increases the coefficient of determination and reduces the mean error to ~0.005 compared to the ground lidar (could be improved with clever spike removing methods)

CSTB
le futur en construction

WEAMEC
Research, Education & Innovation in Pays de la Loire
FOR MARINE ENERGY

AKROCEAN
Ocean Data as a Service

CENTRALE NANTES

VALOREM
opérateur en énergies vertes

EDF renouvelables

THANK YOU FOR YOUR ATTENTION